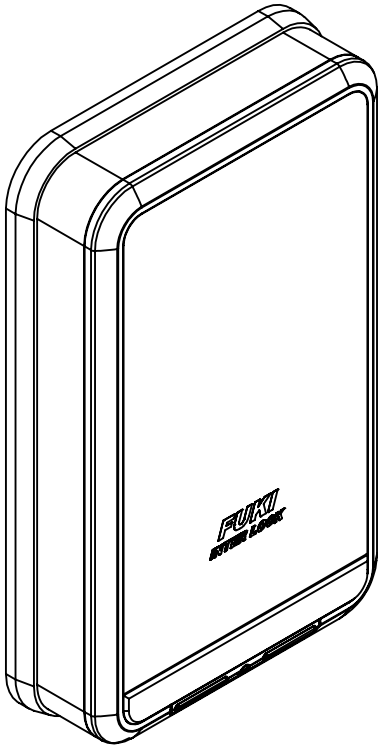
FUKI
INTER LOCK

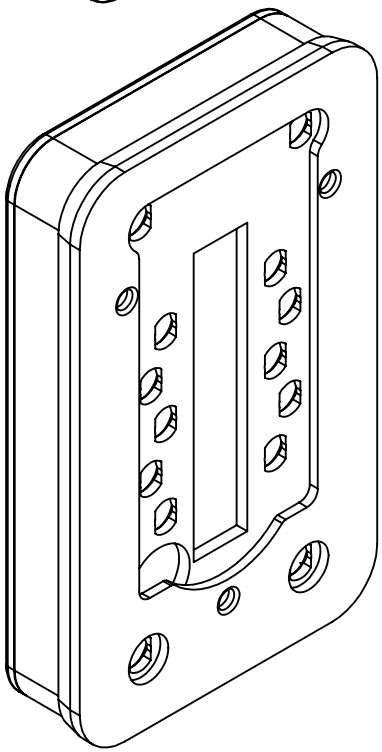

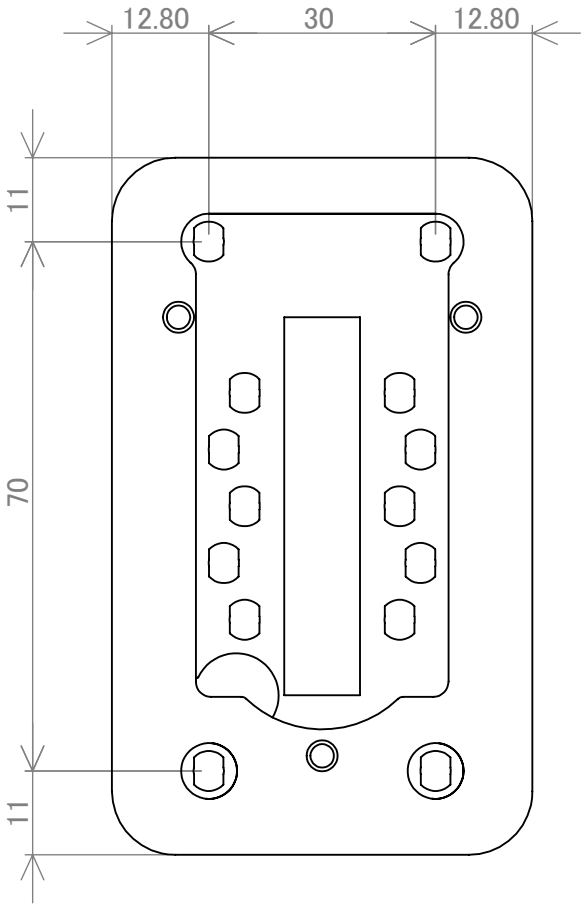
12.80
30
12.80
11
70
11

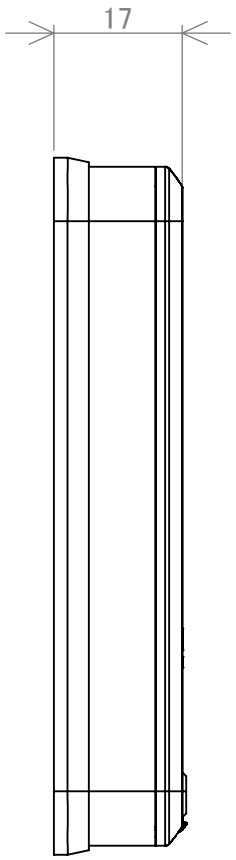
17

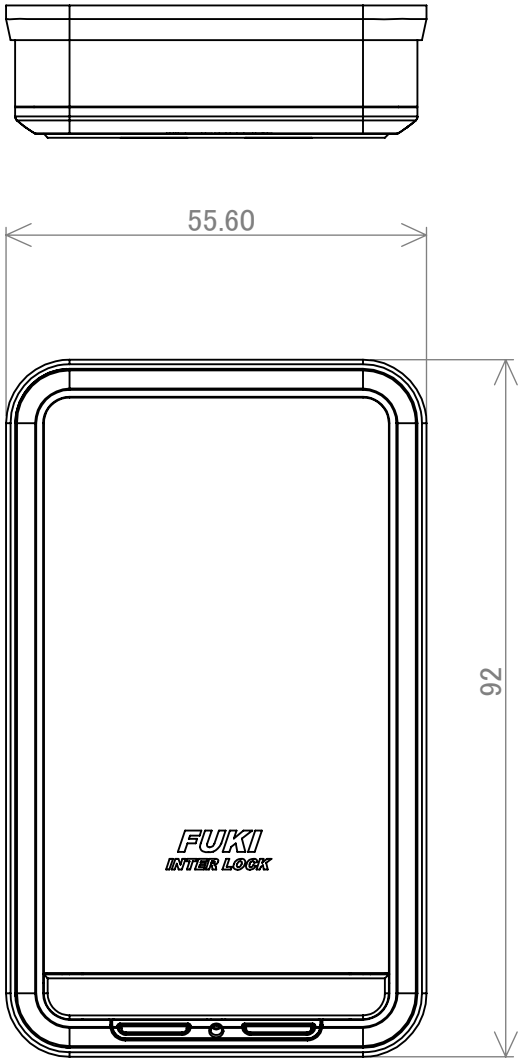
55.60
92
FUKI
INTER LOCK

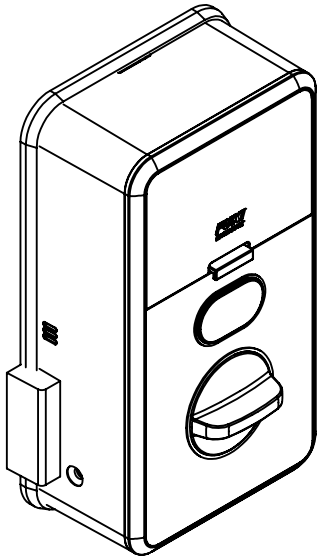

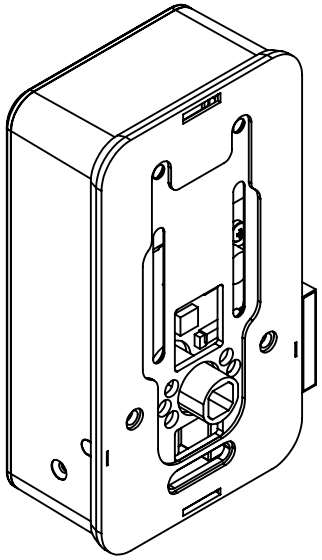

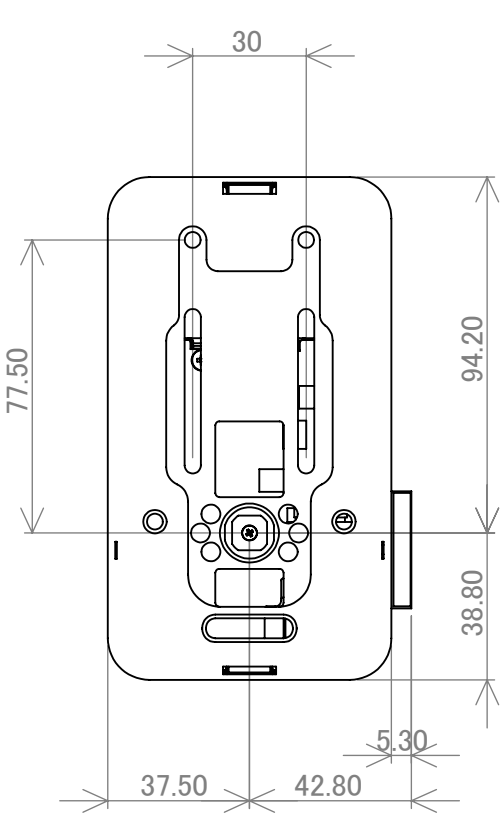
30
77.50
94.20
38.80
5.30
37.50
42.80

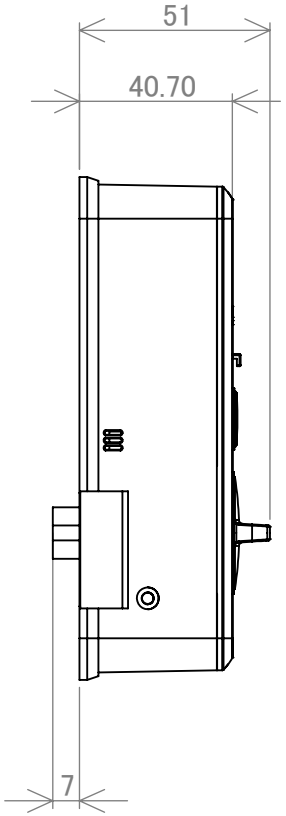
51
40.70
7

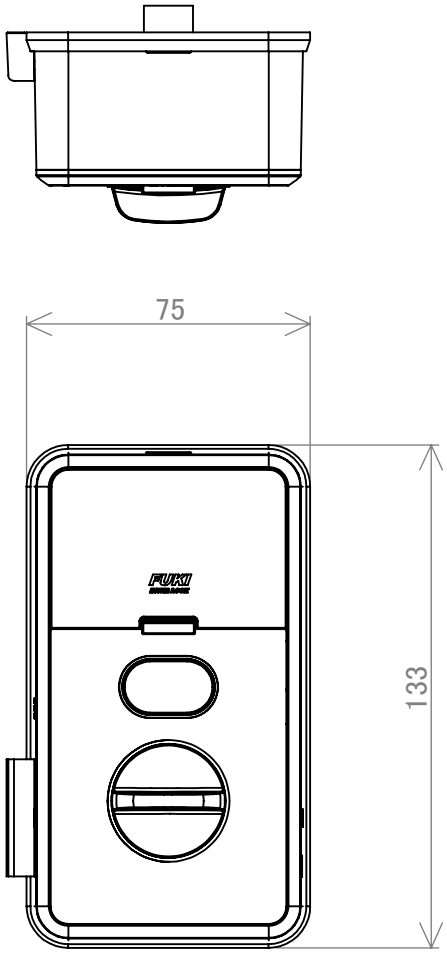
75
133

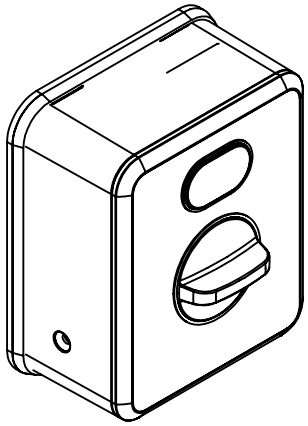

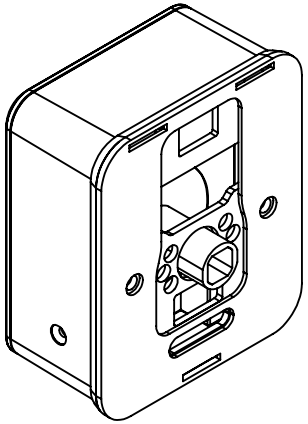

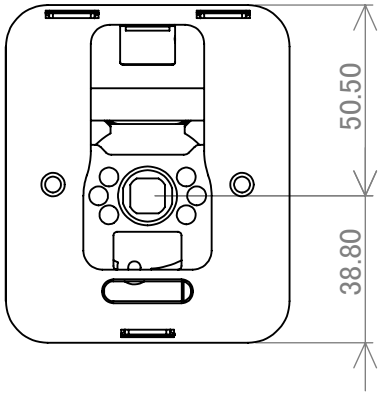
50.50
38.80

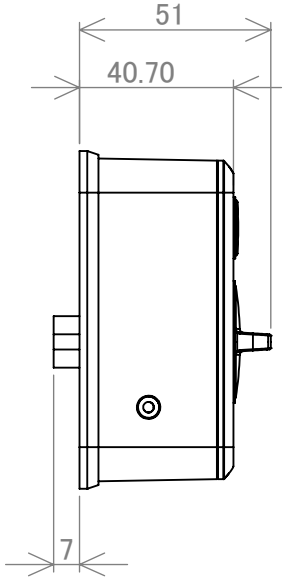
51
40.70
7

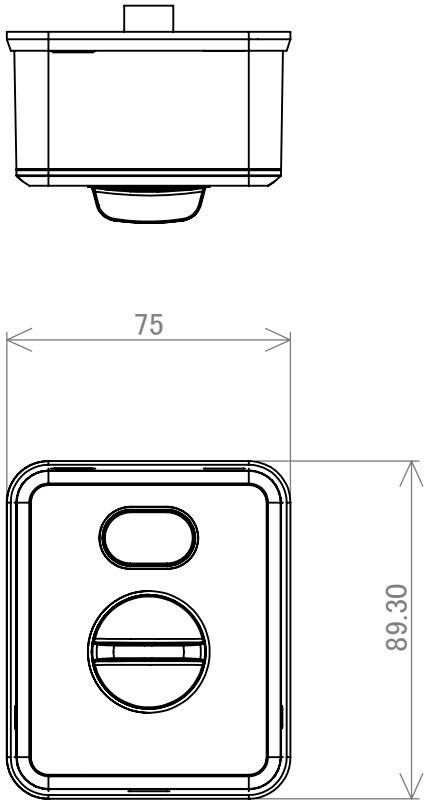
75
89.30